ASTROFLAME
MANUFACTURERS OF PASSIVE FIRE STOP PRODUCTS

CE

1121

Astroflame Fireseals Ltd
Unit 8 The I O Centre
Stephenson Road
Segensworth, Fareham
Hampshire, PO15 5RU

14
1121-CPR-JA5025

ETA-14/0097
ETAG 026-Part 1
ETAG 026-Part 2
Astroflame PS Coating

"see ETA-14/0097 for relevant characteristics"

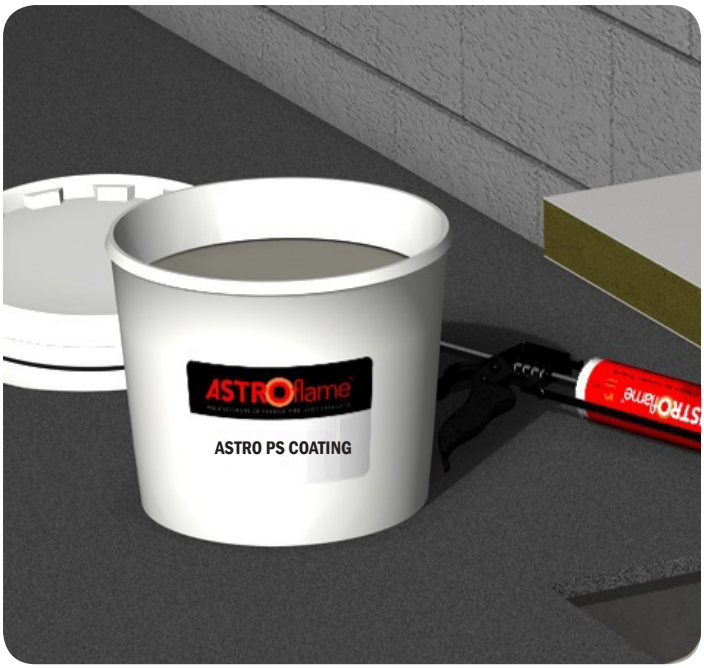

Technical Data Sheet

Astroflame PS Coating®

UIC of product-type: AFPSC

Issue: 1
July 2014

Astroflame Fireseals Ltd
Unit 8, The I O Centre
Stephenson Road
Segensworth, Fareham
Hampshire, PO15 5RU

Tel: +44 (0) 1329 844500
Fax: +44 (0) 1329 844600
Email: sales@astroflame.com
Website: www.astroflame.com

TECHNICAL DATA SHEET

ASTROFLAME PS COATING®

ETA 14-0097

CE-1121-CPR-JA5025

Unique identification code of product-type: AFPSC

Technical Description of the Product

Astroflame PS Coating is an ablative coating applied to mineral wool board used to reinstate the fire resistance performance of wall construction where they have been provided with apertures for the penetration of single or multiple services.

The mineral wool board is then cut and friction fit into the aperture, prior to being inserted into the aperture in the wall. The Astroflame PS Coating is then applied over the surface of the board material to provide a dry film thickness of 0.7mm.

Astroflame PS Coating is supplied in 2.5, 5. 10, 20, 25kg and 205 liter pails

Mineral fibre boards are 50mm thick and supplied in overall dimensions 1200mm x 600mm with a density of 140kg/m^3

Astro Intu Mastic is required to seal all joints and junctions during the sealing process.

Astroflame HPE Graphite sealant is required to seal around specific services. Astroflame HPE Graphite sealant is subject to a separate ETA referenced 14/0096

Internal use - ETAG 026-3 (used as European Assessment Document EAD) Type Z_1

Intended use

The intended use of System Astroflame PS Coating is to reinstate the fire resistance performance of rigid and flexible wall constructions where they are penetrated by various cables and metallic pipes

The specific elements of construction that the system Astroflame PS Coating may be used to provide a penetration seal in, are as follows:

Rigid walls:

The wall must have a minimum thickness of 100mm and comprise concrete, aerated concrete or masonry, with a minimum density of 650kg/m^3

Flexible walls:

The wall must have a minimum thickness of 100mm and comprise timber or steel stubs lined on both faces with minimum 2 layers of 12.5mm thick, 'Type F' Gypsum boards according to EN 520. In timber stud walls, no part of the penetration shall be closer than 100mm to a stud, the cavity must be closed between the penetration seal and the stud and minimum 100mm of insulation of class A1 or A2 according to En 13501-1, is provided within the cavity between the penetration seal and the stud.

The supporting construction must be classified in accordance with EN 13501-2 for the required fire resistance period

The System Astroflame PS Coating may be used to provide a penetration seal with pipes and cables.

The total amount of cross sections of services (including insulation) should not exceed 60% of the penetration area

The system Astroflame PS Coating may be used to seal apertures in the separating element up to 730mm wide by 1200mm high. The minimum permitted separation between adjacent seals/apertures is 200mm

Pipes must be installed singular, cables require no minimum separation

Services in walls shall be supported at maximum 250mm from the face of the separating element

The provisions made in this European Technical Assessment are based on an assumed working life of the Astroflame PS Coating of 10 years, provided that the conditions laid down in the product data sheet for the packaging/ transport/ storage/ installation/ use/ repair are met. The indications given on the working life cannot be interpreted as a guarantee given by the producer, but are to be regarded only as a means for choosing the rights products in relation to the expected economically reasonable working life of the works

Astroflame Fireseals Ltd
Unit 8, The I O Centre
Stephenson Road
Segensworth, Fareham
Hampshire, PO15 5RU

Tel: +44 (0) 1329 844500
Fax: +44 (0) 1329 844600
Email: sales@astroflame.com
Website: www.astroflame.com

Unique identification code of product-type: AFPSC

Use Category

Type Z_1: Intended for use in internal conditions with humidity equal to or higher than 85% RH excluding temperatures below 0°C, without to rain or UV

The assessment of fitness for use has been made in accordance with EOTA ETAG 026 Part 2: 2011-08-08 (used as European Assessment Document, EAD)

Reaction to fire

System Astroflame PS Coating is classified 'F' in accordance with EN 13501-1

Resistance to fire

System Astroflame PS Coating has been tested in accordance with BS EN 1366-3: 2009 based upon the test results and the field of direct application specified within EN 1366-3: 2009, the system Astroflame PS Coating has been classified in accordance with EN 13501-2,

The seals may only be penetrated by the services described in this document; other parts or support constructions must be penetrate the seal

The service support construction must be fixed to the building element containing the penetration seal or a suitable adjacent building element, in such a manner that in the case of fire, no additional load is imposed on seal. Furthermore it is assumed that the unexposed face support is maintained for the required period of fire resistance.

Pipes must be perpendicular to the seal surface.

It is assumed that compressed air system are switched off by other means in the case of fire.

The function of the pipe seal in case of pneumatic dispatch system, pressurised air systems et. Is guaranteed only when the systems are shut off in case of fire.

The assessment does not cover the avoidance of destruction of the seal or of the abutting building element(s) by force caused by temperature changes in case of fire. This has to be considered when designing the piping system.

The approval does not address any risks associated with leakage of dangerous liquids or gases caused by failure of the pipe(s) in case of fire

The durability assessment does not take account of the possible effect of substances permeating through the pipe on the penetration seal

Dangerous substances

The applicant is required to submit a written declaration stating whether or not the fire topping and fire sealing product contains dangerous substances according to European and national regulations, when and where relevant in the Member State of destination, and shall list these substances.

Astroflame Fireseals Ltd declare that product Astroflame PS Coating is in compliance with Council Directive 76/769/EEC of 27th July 1976 on the approximation of the laws, regulations and administrative provisions of the Member States relating to restrictions on the marketing and use of certain dangerous substances and preparations (incl. all amendments and adaptations)

Confirmation has further been declared that all dangerous chemical substances ≥ 1.0% w/w as well as all toxic, carcinogenic, toxic for reproduction and mutagenic chemical substances ≥ 0.1% w/w (status: 29. adaption - 2004/73/EG - of the EU directive 67/548/EEC - classification, packaging and labelling of dangerous substances) are stated in the Astroflame PS Coating material safety data sheets (according to 91/155/EEC including amendments) and have been considered for the classification of the products according to the directive 1999/45/EG (classification of preparations, including amendments).

All dangerous chemicals substances are below the classification limits 67/548/EEC

TECHNICAL DATA SHEET

ASTROFLAME
PS COATING®

ETA 14-0097
CE-1121-CPR-JA5025

Unique identification code of product-type: AFPSC

Durability and serviceability

Astroflame PS Coating has been tested in accordance with EOTA Technial Report - TR024 - Edition November 2006, for the type Z_1 use category specified in ETAG 026-3 (used as European Assessment Document, EAD), and the results of the tests have demonstrated suitability for penetration seals intended for use in internal conditions with humidity equal to or higher than 85% RH excluding temperatures below 0°C, without exposure to rain or UV

Assessment and Verification of Constancy of Performance (Hereinafter AVCP) System applied, with references to its legal base.

According to the decision 1999/454/EC of the European Commission the system of assessment and verification of constancy of performance (see annex V to the regulation (EU) No 305/2011) given in the following table apply:

Products	Intended uses	Level of class	System
Fire stopping and fire sealing products	For fire compartmentation and / or fire protection or fire performance	Any	System 1

Flexible and Rigid wall construction according to 1.2.1 with wall thickness of minimum 100mm

Penetration seal with Astroflame PS Coating installed centrally within the wall

Service(s) **Mild Steel or Copper**	**Insulation**	**Seal**	**Classification**
40mm diameter and 1.5 - 14.2mm wall	20mm thick foil faced glass wool insulation (min 80kg/m³)	15mm deep x 15mm wide annulus Astroflame HPE Graphite Sealant to both faces seal	**EI 60 U/C**
40 - 159mm diameter and 2.3 - 14.2mm wall	30mm thick foil faced glass wool insulation (min 80kg/m³)		**E 60 U/C EI 45 U/C**

Service(s) **Mild Steel or Copper**	**Insulation**	**Seal**	**Classification**
40mm diameter and 1.7 - 14.2mm wall	20mm thick foil faced glass wool insulation (min 80kg/m³)	15mm deep x 15mm wide annulus Astroflame HPE Graphite Sealant to both faces seal	**EI60 U/C**
40 - 150mm diameter and 2.3 - 14.2mm wall	30mm thick foil faced glass wool insulation (min 80kg/m³)		

TECHNICAL DATA SHEET

ASTROFLAME

PS COATING®

ETA 14-0097

CE-1121-CPR-JA5025

Unique identification code of product-type: AFPSC

DESIGN TO ETA 14-0097 & CE 1121-CPR-JA5025
ASTRO PS COATING IN A FIRE RESISTANT METALLIC PIPE
PENETRATION SEAL THROUGH FLEXIBLE WALL

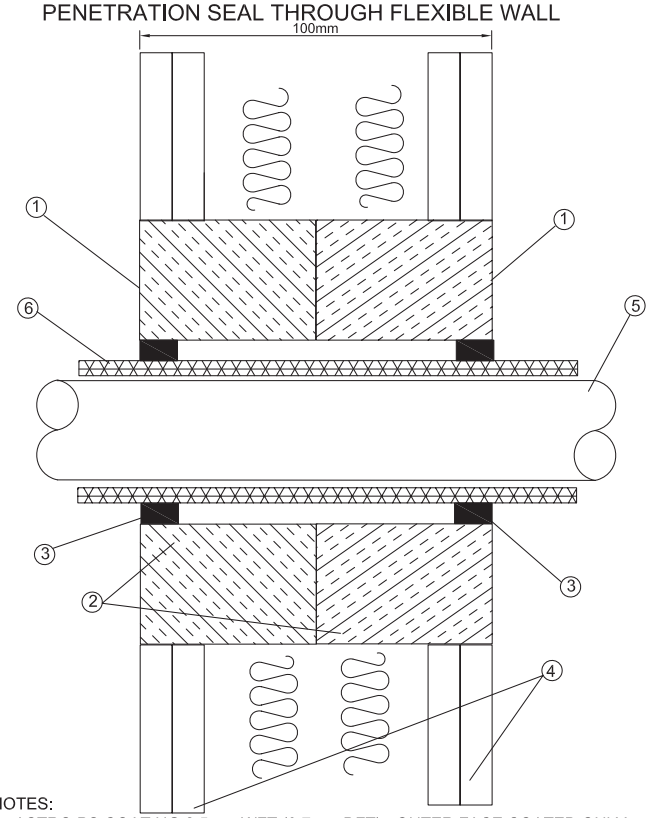

NOTES:
1 - ASTRO PS COATING 2.5mm WFT (0.7mm DFT) - OUTER FACE COATED ONLY
2 - STONE WOOL 50mm x 2 (100mm) 140kg/m3 DENSITY
3 - ASTRO HPE SEALANT
4 - 100mm FLEXIBLE WALL CONSTRUCTION - **NO FILLET/PICTURE FRAME REQUIRED**
5 - METALLIC PIPE
6 - INSULATION MATERIAL

ASTROFLAME MANUFACTURERS OF PASSIVE FIRE STOP PRODUCTS	Astroflame (Fireseals) Ltd Intumescent House Unit 8 The IO Centre Stephenson Road Segensworth Fareham, PO15 5RU	FILE NAME: DET 41-0011 DATE: 20/05/14	ASTROFLAME has provided this specification on the basis of data, information & site conditions given to ASTROFLAME by the client, the respective ASTROFLAME product information & the existing level of technical knowledge. This specification relates to the expected performance of the proposed detail, were it to be subjected to the standardised test against which the judgement was made. The accuracy of this specification can only be guaranteed provided: 1. Only original ASTROFLAME products as defined within this specification are used 2. These specific products are used & installed only by a competent, experienced installer & by strictly obeying the conditions & calculations mentioned in this specification, as well as all relevant technical instructions, operating manuals, setting manuals, installation manuals & all other ASTROFLAME data sheets. 3. The proposed performance, listed prerequisites & criteria conform with actual existing site conditions & have been checked & agreed by the installer & client.

TECHNICAL DATA SHEET

ASTROFLAME

PS COATING®

ETA 14-0097

CE-1121-CPR-JA5025

Unique identification code of product-type: AFPSC

DESIGN TO ETA 14-0097 & CE 1121-CPR-JA5025
ASTRO PS COATING IN A FIRE RESISTANT MULTI METALLIC PIPE PENETRATION SEAL THROUGH FLEXIBLE WALL

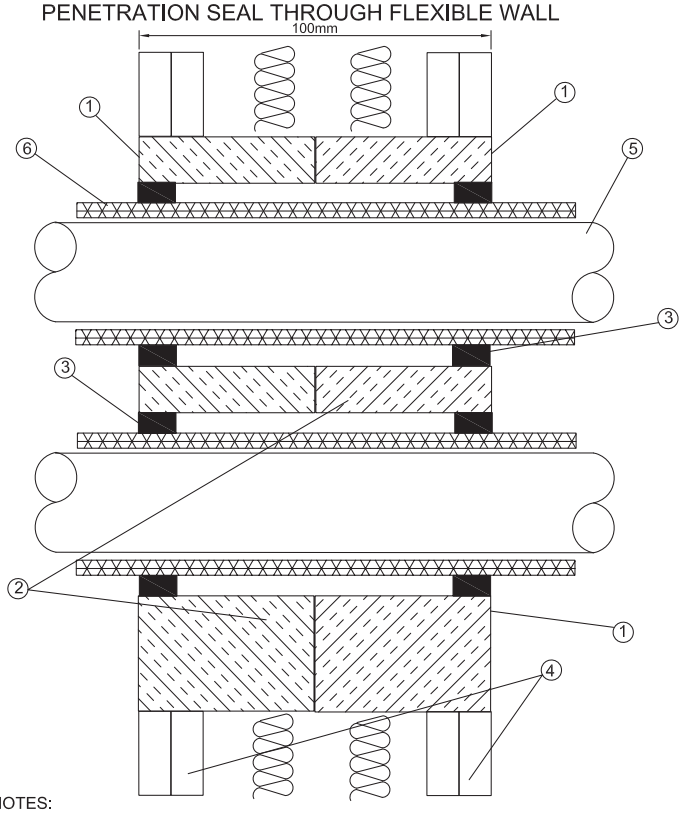

NOTES:
1 - ASTRO PS COATING 2.5mm WFT (0.7mm DFT) - OUTER FACE COATED ONLY
2 - STONE WOOL 50mm x 2 (100mm) 140kg/m3 DENSITY
3 - ASTRO HPE SEALANT
4 - 100mm FLEXIBLE WALL CONSTRUCTION - **NO FILLET/PICTURE FRAME REQUIRED**
5 - MULTI METALLIC PIPES
6 - INSULATION MATERIAL

ASTROFLAME MANUFACTURERS OF PASSIVE FIRE STOP PRODUCTS	Astroflame (Fireseals) Ltd Intumescent House Unit 8 The IO Centre Stephenson Road Segensworth Fareham, PO15 5RU	FILE NAME: DET 41-0012 DATE: 20/05/14	ASTROFLAME has provided this specification on the basis of data, information & site conditions given to ASTROFLAME by the client, the respective ASTROFLAME product information & the existing level of technical knowledge. This specification relates to the expected performance of the proposed detail, were it to be subjected to the standardised test against which the judgement was made. The accuracy of this specification can only be guaranteed provided: 1. Only original ASTROFLAME products as defined within this specification are used 2. These specific products are used & installed only by a competant, experienced installer & by strictly obeying the conditions & calculations mentioned in this specification, as well as all relevant technical instructions, operating manuals, setting manuals, installation manuals & all other ASTROFLAME data sheets. 3. The proposed performance, listed prerequisities & criteria conform with actual existing site conditions & have been checked & agreed by the installer & client.

TECHNICAL DATA SHEET

ASTROFLAME PS COATING®

ETA 14-0097

CE-1121-CPR-JA5025

Unique identification code of product-type: AFPSC

DESIGN TO ETA 14-0097 & CE 1121-CPR-JA5025 ASTRO PS COATING IN A FIRE RESISTANT MULTI METALLIC PIPE PENETRATION SEAL THROUGH RIGID WALL

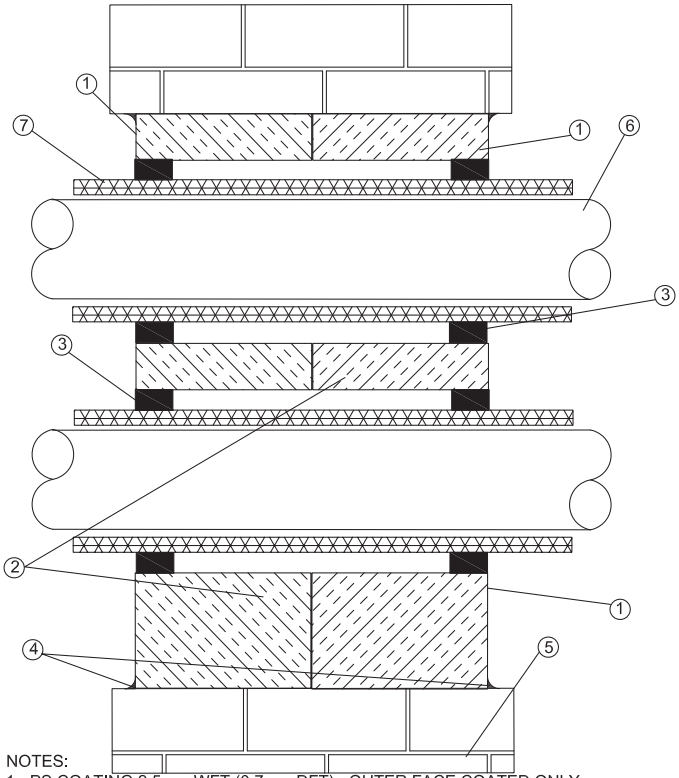

NOTES:
1 - PS COATING 2.5mm WFT (0.7mm DFT) - OUTER FACE COATED ONLY
2 - STONE WOOL 50mm x 2 (100mm) 140kg/m3 DENSITY
3 - ASTRO HPE SEALANT
4 - ASTRO INTU MASTIC
5 - RIGID CONSTRUCTION
6 - MULTI METALLIC PIPES
7 - INSULATION MATERIAL

ASTROFLAME MANUFACTURERS OF PASSIVE FIRE STOP PRODUCTS	Astroflame (Fireseals) Ltd Intumescent House Unit 8 The IO Centre Stephenson Road Segensworth Fareham, PO15 5RU	FILE NAME: DET 41-0013 DATE: 20/05/14	ASTROFLAME has provided this specification on the basis of data, information & site conditions given to ASTROFLAME by the client, the respective ASTROFLAME product information & the existing level of technical knowledge. This specification relates to the expected performance of the proposed detail, were it to be subjected to the standardised test against which the judgement was made. The accuracy of this specification can only be guaranteed provided: 1. Only original ASTROFLAME products as defined within this specification are used 2. These specific products are used & installed only by a competant, experienced installer & by strictly obeying the conditions & calculations mentioned in this specification, as well as all relevant technical instructions, operating manuals, setting manuals, installation manuals & all other ASTROFLAME data sheets. 3. The proposed performance, listed prerequisities & criteria conform with actual existing site conditions & have been checked & agreed by the installer & client.

TECHNICAL DATA SHEET

ASTROFLAME

PS COATING®

ETA 14-0097

CE-1121-CPR-JA5025

Unique identification code of product-type: AFPSC

DESIGN TO ETA 14-0097 & CE 1121-CPR-JA5025
ASTRO PS COATING IN A FIRE RESISTANT METALLIC PIPE
PENETRATION SEAL THROUGH RIGID WALL

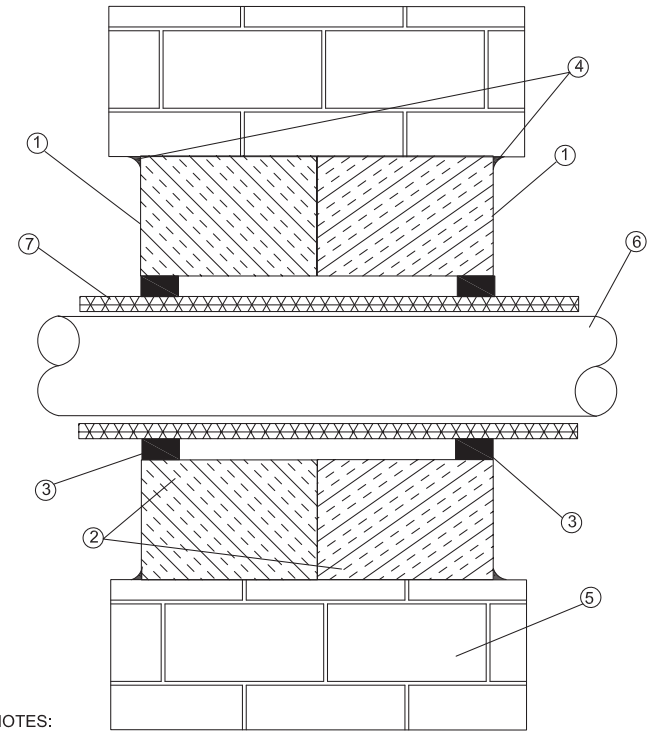

NOTES:
1 - ASTRO PS COATING 2.5mm WFT (0.7mm DFT) - OUTER FACE COATED ONLY
2 - STONE WOOL 50mm x 2 (100mm) 140kg/m3 DENSITY
3 - ASTRO HPE SEALANT
4 - ASTRO INTU MASTIC
5 - RIGID CONSTRUCTION
6 - METALLIC PIPE
7 - INSULATION MATERIAL

ASTROFLAME MANUFACTURERS OF PASSIVE FIRE STOP PRODUCTS	Astroflame (FIreseals) Ltd Intumescent House Unit 8 The IO Centre Stephenson Road Segensworth Fareham, PO15 5RU	FILE NAME: DET 41-0014 DATE: 20/05/14	ASTROFLAME has provided this specification on the basis of data, information & site conditions given to ASTROFLAME by the client, the respective ASTROFLAME product information & the existing level of technical knowledge. This specification relates to the expected performance of the proposed detail, were it to be subjected to the standardised test against which the judgement was made. The accuracy of this specification can only be guaranteed provided: 1. Only original ASTROFLAME products as defined within this specification are used 2. These specific products are used & installed only by a competent, experienced installer & by strictly obeying the conditions & calculations mentioned in this specification, as well as all relevant technical instructions, operating manuals, setting manuals, installation manuals & all other ASTROFLAME data sheets. 3. The proposed performance, listed prerequisities & criteria conform with actual existing site conditions & have been checked & agreed by the installer & client.

TECHNICAL DATA SHEET

ASTROFLAME

PS COATING®

ETA 14-0097

CE-1121-CPR-JA5025

Unique identification code of product-type: AFPSC

Flexible and Rigid wall constructions according to 1.2.1 with wall thickness of minimum 100mm

Penetration seal with System Astroflame PS Coating installed centrally within the wall

Service(s)	Classification
Electrical cables up to 21mm dia	EI 60
Electrical cables 22mm to 80mm dia	E 60, EI 30
Cable Trays and Ladders	EI 60
100mm diameter bundle telecommunication cable type "F"	EI 60
Unsheathed electrical cables up to 17mm dia	E 60, EI 15
Unsheathed electrical cables 18 - 24mm dia	E 60, EI 30
Steel or Copper Conduits up to 16mm	E 60, EI 15
Plastic conduits up to 16mm	EI 60

DESIGN TO ETA 14-0097 & CE 1121-CPR-JA5025
ASTRO PS COATING IN A FIRE RESISTANT CABLE TRAY & CABLE PENETRATION SEAL THROUGH FLEXIBLE WALL

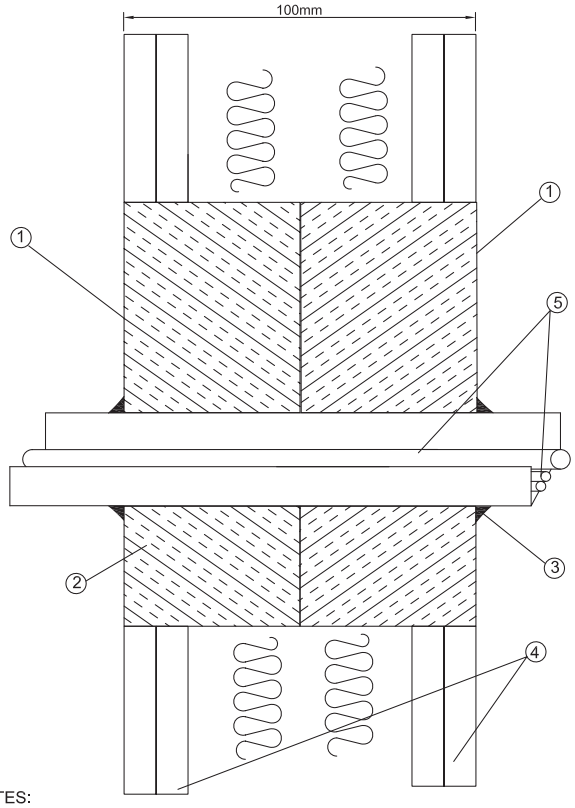

NOTES:
1 - ASTRO PS COATING 2.5mm WFT (0.7mm DFT) - OUTER FACE COATED ONLY
2 - STONE WOOL 50mm x 2 (100mm) 140kg/m3 DENSITY
3 - ASTRO INTU MASTIC
4 - 100mm FLEXIBLE WALL CONSTRUCTION - **NO FILLET/PICTURE FRAME REQUIRED**
5 - CABLE TRAY & CABLES

ASTROFLAME MANUFACTURERS OF PASSIVE FIRE STOP PRODUCTS

Astroflame (Fireseals) Ltd
Intumescent House
Unit 8 The IO Centre
Stephenson Road
Segensworth
Fareham, PO15 5RU

FILE NAME: DET 41-0008

DATE: 20/05/14

ASTROFLAME has provided this specification on the basis of data, information & site conditions given to ASTROFLAME by the client, the respective ASTROFLAME product information & the existing level of technical knowledge. This specification relates to the expected performance of the proposed detail, were it to be subjected to the standardised test against which the judgement was made. The accuracy of this specification can only be guaranteed provided:
1. Only original ASTROFLAME products as defined within this specification are used
2. These specific products are used & installed only by a competant, experienced installer & by strictly obeying the conditions & calculations mentioned in this specification, as well as all relevent technical instructions, operating manuals, setting manuals, installation manuals & all other ASTROFLAME data sheets.
3. The proposed performance, listed prerequisities & criteria conform with actual existing site conditions & have been checked & agreed by the installer & client.

TECHNICAL DATA SHEET

ASTROFLAME

PS COATING®

ETA 14-0097

CE-1121-CPR-JA5025

Unique identification code of product-type: AFPSC

DESIGN TO ETA 14-0097 & CE 1121-CPR-JA5025
ASTRO PS COATING IN A FIRE RESISTANT MULTI CABLE TRAY &
CABLE PENETRATION SEAL THROUGH FLEXIBLE WALL

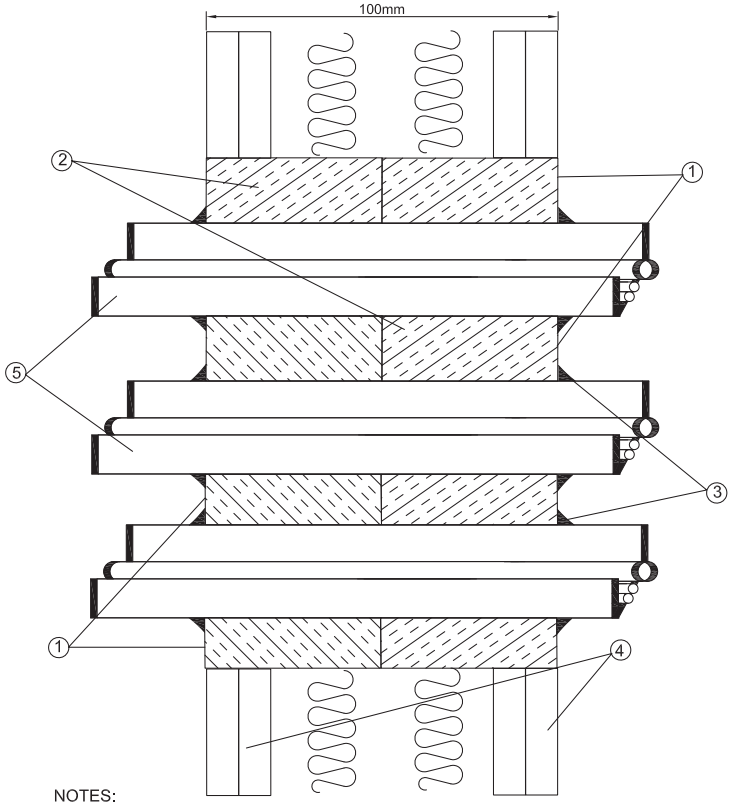

NOTES:
1 - ASTRO PS COATING 2.5mm WFT (0.7mm DFT) - OUTER FACE COATED ONLY
2 - STONE WOOL 50mm x 2 (100mm) 140kg/m3 DENSITY
3 - ASTRO INTU MASTIC
4 - 100mm FLEXIBLE WALL CONSTRUCTION - **NO FILLET/PICTURE FRAME REQUIRED**
5 - MULTI CABLE TRAY & CABLES

ASTROFLAME MANUFACTURERS OF PASSIVE FIRE STOP PRODUCTS	Astroflame (Fireseals) Ltd Intumescent House Unit 8 The IO Centre Stephenson Road Segensworth Fareham, PO15 5RU	FILE NAME: DET 41-0010 DATE: 20/05/14	ASTROFLAME has provided this specification on the basis of data, information & site conditions given to ASTROFLAME by the client, the respective ASTROFLAME product information & the existing level of technical knowledge. This specification relates to the expected performance of the proposed detail, were it to be subjected to the standardised test against which the judgement was made. The accuracy of this specification can only be guaranteed provided: 1. Only original ASTROFLAME products as defined within this specification are used 2. These specific products are used & installed only by a competant, experienced installer & by strictly obeying the conditions & calculations mentioned in this specification, as well as all relevent technical instructions, operating manuals, setting manuals, installation manuals & all other ASTROFLAME data sheets. 3. The proposed performance, listed prerequisities & criteria conform with actual existing site conditions & have been checked & agreed by the installer & client.

TECHNICAL DATA SHEET

ASTROFLAME

PS COATING®

Unique identification code of product-type: AFPSC

ETA 14-0097

CE-1121-CPR-JA5025

DESIGN TO ETA 14-0097 & CE 1121-CPR-JA5025
PS COATING IN A FIRE RESISTANT CABLE TRAY & CABLE PENETRATION SEAL THROUGH RIGID WALL

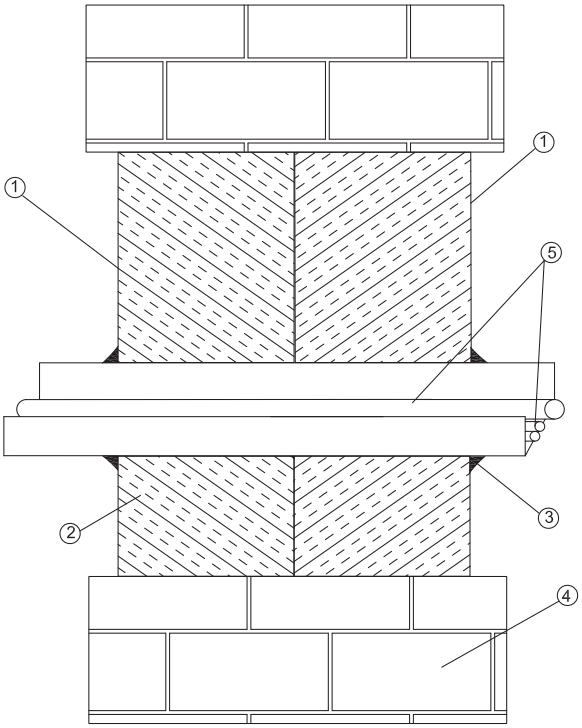

NOTES:
1 - ASTRO PS COATING 2.5mm WFT (0.7mm DFT) - OUTER FACE COATED ONLY
2 - STONE WOOL 50mm x 2 (100mm) 140kg/m3 DENSITY
3 - ASTRO INTU MASTIC
4 - RIGID CONSTRUCTION
5 - CABLE TRAY & CABLES

ASTROFLAME MANUFACTURERS OF PASSIVE FIRE STOP PRODUCTS	Astroflame (Fireseals) Ltd Intumescent House Unit 8 The IO Centre Stephenson Road Segensworth Fareham, PO15 5RU	FILE NAME: DET 41-0017 DATE: 20/05/14	ASTROFLAME has provided this specification on the basis of data, information & site conditions given to ASTROFLAME by the client, the respective ASTROFLAME product information & the existing level of technical knowledge. This specification relates to the expected performance of the proposed detail, were it to be subjected to the standardised test against which the judgement was made. The accuracy of this specification can only be guaranteed provided: 1. Only original ASTROFLAME products as defined within this specification are used 2. These specific products are used & installed only by a competant, experienced installer & by strictly obeying the conditions & calculations mentioned in this specification, as well as all relevent technical instructions, operating manuals, setting manuals, installation manuals & all other ASTROFLAME data sheets. 3. The proposed performance, listed prerequisities & criteria conform with actual existing site conditions & have been checked & agreed by the installer & client.

TECHNICAL DATA SHEET

ASTROFLAME PS COATING®

ETA 14-0097

CE-1121-CPR-JA5025

Unique identification code of product-type: AFPSC

DESIGN TO ETA 14-0016 & CE 1121-CPR-JA5025
ASTRO PS COATING IN A FIRE RESISTANT MULTI CABLE TRAY &
CABLE PENETRATION SEAL THROUGH RIGID WALL

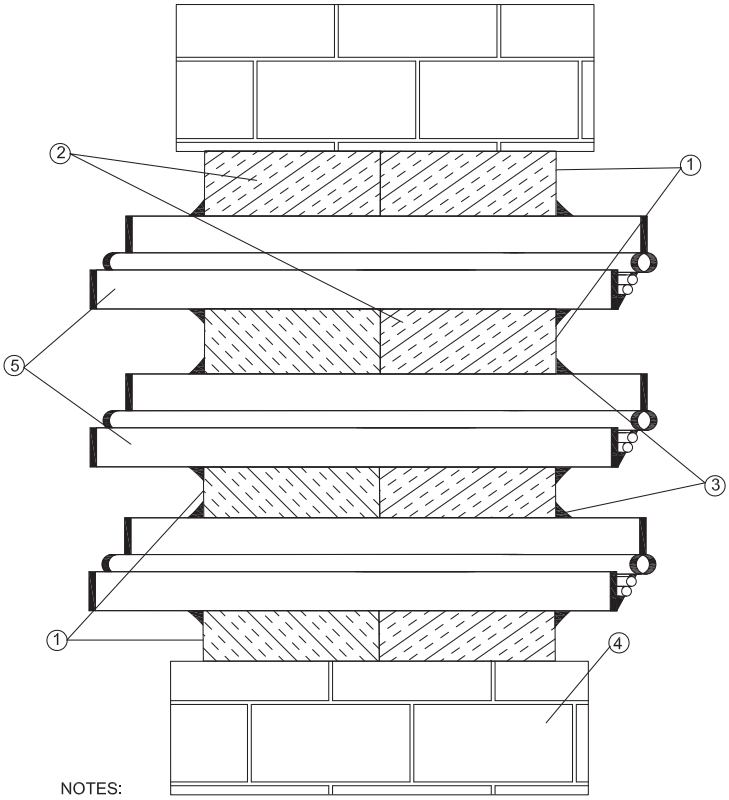

NOTES:
1 - ASTRO PS COATING 2.5mm WFT (0.7mm DFT) - OUTER FACE COATED ONLY
2 - STONE WOOL 50mm x 2 (100mm) 140kg/m3 DENSITY
3 - ASTRO INTU MASTIC
4 - RIGID CONSTRUCTION
5 - MULTI CABLE TRAY & CABLES

ASTROFLAME MANUFACTURERS OF PASSIVE FIRE STOP PRODUCTS	Astroflame (Fireseals) Ltd Intumescent House Unit 8 The IO Centre Stephenson Road Segensworth Fareham, PO15 5RU	FILE NAME: DET 41-0016 DATE: 20/05/14	ASTROFLAME has provided this specification on the basis of data, information & site conditions given to ASTROFLAME by the client, the respective ASTROFLAME product information & the existing level of technical knowledge. This specification relates to the expected performance of the proposed detail, were it to be subjected to the standardised test against which the judgement was made. The accuracy of this specification can only be guaranteed provided: 1. Only original ASTROFLAME products as defined within this specification are used 2. These specific products are used & installed only by a competant, experienced installer & by strictly obeying the conditions & calculations mentioned in this specification, as well as all relevent technical instructions, operating manuals, setting manuals, installation manuals & all other ASTROFLAME data sheets. 3. The proposed performance, listed prerequisities & criteria conform with actual existing site conditions & have been checked & agreed by the installer & client.

TECHNICAL DATA SHEET

ASTROFLAME

PS COATING®

ETA 14-0097

CE-1121-CPR-JA5025

Unique identification code of product-type: AFPSC

Test Results		Specimen B
Integrity Performance	Sustained flaming	163 minutes
	Gap gauge	162 minutes
	Cotton Pad	161 minutes
Insulation Performance		161 minutes

DESIGN TO ETA 14-0097 & CE 1121-CPR-JA5025
ASTRO PS COATING IN A FIRE RESISTANT BLANK SEAL
PENETRATION SEAL THROUGH FLEXIBLE WALL

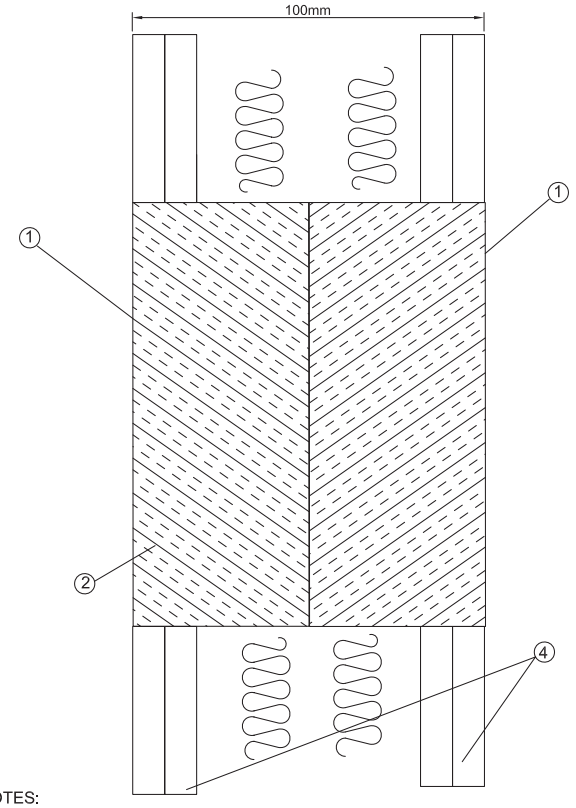

NOTES:
1 - ASTRO PS COATING 2.5mm WFT (0.7mm DFT) - OUTER FACE COATED ONLY
2 - STONE WOOL 50mm x 2 (100mm) 140kg/m3 DENSITY
3 - ASTRO INTU MASTIC
4 - 100mm FLEXIBLE WALL CONSTRUCTION - **NO FILLET/PICTURE FRAME REQUIRED**

ASTROFLAME MANUFACTURERS OF PASSIVE FIRE STOP PRODUCTS	Astroflame (Fireseals) Ltd Intumescent House Unit 8 The IO Centre Stephenson Road Segensworth Fareham, PO15 5RU	FILE NAME: DET 41-0009 DATE: 20/05/14	ASTROFLAME has provided this specification on the basis of data, information & site conditions given to ASTROFLAME by the client, the respective ASTROFLAME product information & the existing level of technical knowledge. This specification relates to the expected performance of the proposed detail, were it to be subjected to the standardised test against which the judgement was made. The accuracy of this specification can only be guaranteed provided: 1. Only original ASTROFLAME products as defined within this specification are used 2. These specific products are used & installed only by a competant, experienced installer & by strictly obeying the conditions & calculations mentioned in this specification, as well as all relevent technical instructions, operating manuals, setting manuals, installation manuals & all other ASTROFLAME data sheets. 3. The proposed performance, listed prerequisites & criteria conform with actual existing site conditions & have been checked & agreed by the installer & client.

TECHNICAL DATA SHEET

ASTROFLAME

PS COATING®

ETA 14-0097

CE-1121-CPR-JA5025

Unique identification code of product-type: AFPSC

DESIGN TO ETA 14-0097& CE 1121-CPR-JA5025
ASTRO PS COATING IN A FIRE RESISTANT BLANK SEAL
PENETRATION SEAL THROUGH RIGID WALL

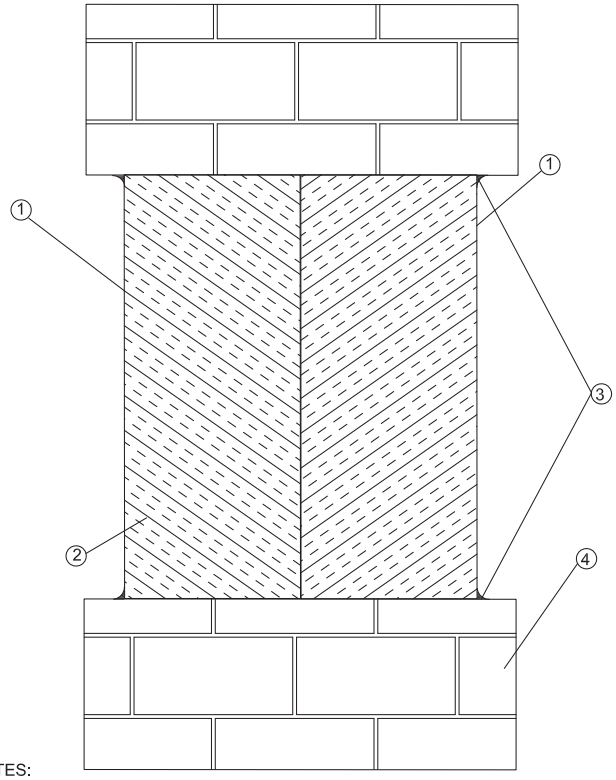

NOTES:
1 - ASTRO PS COATING 2.5mm WFT (0.7mm DFT) - OUTER FACE COATED ONLY
2 - STONE WOOL 50mm x 2 (100mm) 140kg/m3 DENSITY
3 - ASTRO INTU MASTIC
4 - RIGID CONSTRUCTION

ASTROFLAME MANUFACTURERS OF PASSIVE FIRE STOP PRODUCTS	Astroflame (FIreseals) Ltd Intumescent House Unit 8 The IO Centre Stephenson Road Segensworth Fareham, PO15 5RU	FILE NAME: DET 41-0015 DATE: 20/05/14	ASTROFLAME has provided this specification on the basis of data, information & site conditions given to ASTROFLAME by the client, the respective ASTROFLAME product information & the existing level of technical knowledge. This specification relates to the expected performance of the proposed detail, were it to be subjected to the standardised test against which the judgement was made. The accuracy of this specification can only be guaranteed provided: 1. Only original ASTROFLAME products as defined within this specification are used 2. These specific products are used & installed only by a competant, experienced installer & by strictly obeying the conditions & calculations mentioned in this specification, as well as all relevent technical instructions, operating manuals, setting manuals, installation manuals & all other ASTROFLAME data sheets. 3. The proposed performance, listed prerequisities & criteria conform with actual existing site conditions & have been checked & agreed by the installer & client.

TECHNICAL DATA SHEET

ASTROFLAME

PS COATING®

ETA 14-0097

CE-1121-CPR-JA5025

Unique identification code of product-type: AFPSC

Durability and serviceability

Requirement - ETAG No 026 Part 2: Clause 2.4.12 The principle of the durability tests is to select suitable physico-chemical or technological properties of the product and to check Whether these properties have changed during exposure of the product to defined exposure conditions. The product shall be Tested according to the following procedures:

Property	Test Method
Apperance	EOTA ETAG No 026: Part 2: Clause B.12
Flexibility	EOTA ETAG No 026: Part 2: Clause B.5.5
LOI	EOTA TR 024, clause 3.1.14
Hardness After Curing	EOTA ETAG No 026; Part 2: Clause B.5.3

Appearance

Specimen	Exposure	Before	After
1	Durability Z1	Off-white, smooth surface, maintained shape but bulk thickness reduced during cure	No change
4	23°C 50% RH	Off-white, smooth surface, maintained shape but bulk thickness reduced during cure	No change

Flexibility

Anvil diameter	Specimen	Control	Z1 Durability
1”25m	1	PASS	PASS
3/8” 9.5mm	3	PASS	PASS
1/4” 6.4mm	4	PASS	PASS

LOI

	Oxygen Index
Control	30.0
Z_1 Durability	35.1

Comparison

Durability exposure must not alter performance by more than -15%. Z1 conditioned material gave an average Shore ‘A’ hardness of +17% of the control average

Hardness After Curing

Shore ‘A’ hardness reading	
Control	Durability Z_1
5.0	5.5
5.2	6.0

Astroflame Fireseals Ltd
Unit 8, The I O Centre
Stephenson Road
Segensworth, Fareham
Hampshire, PO15 5RU

Tel: +44 (0) 1329 844500
Fax: +44 (0) 1329 844600
Email: sales@astroflame.com
Website: www.astroflame.com

Density if Liquid Materials

A test in accordance with ISO 2811-1 was used to determine the density of liquid materials. The results are detailed below:

Density
1.24g/cm^3

EN14303:2009

The mineral wool board is identified via compliance with EN 14303:2009

Astro Intu Mastic

The identification of the Astro Intu Mastic element to the system Astroflame PS Coating is covered in ETA 13-1069 & 13-1070

Astroflame HPE

The identification of the Astroflame HPE Graphite sealant element to the system Astroflame PS Coating is covered in ETA DRAFT

Initial type testing

The initial type tests were conduction upon samples selected from the Astroflame Fireseals Ltd manufacturing facility referenced EO55 by representatives of Warrington Certification Limited on 15/01/2013. The tested products may there be considered to be representative of current production and no further corroborative evaluation tests are therefore deemed to be necessary.

TECHNICAL DATA SHEET

ASTROFLAME

PS COATING®

ETA 14-0097

CE-1121-CPR-JA5025

Unique identification code of product-type: AFPSC

BMTRADA

Laboratory measurement to BS EN ISO 10140-2 - Airborne Sound Insulation of Building Elements

Test Specimen Name: Astro PS Coating
Client: Astroflame Fireseals Limited
Test Specimen Installed By: BM TRADA
Area of Specimen (S): 1.00 m²
Temperature in Test Rooms: 19.2 °C
Static Pressure: 10006.1 Pa
Humidity in Test Rooms: 44.0 %
Test Specimen Description: 500mm x 2000mm aperture filled with 2 layers of stone wool with PS Coating Barrier See Appendix 3 for specimen details.

Ref. No.: MTZ/F12009/01/C/Rev1/AR3/P005
Date of Test: 04/04/2012

Source Room Volume: 82.00 m³
Receive Room Volume: 70.00 m³

f, Hz		R ,dB
50*		31.3
63*		27.3
80*		23.1
100		30.3
125		31.7
160		36.2
200		38.7
250		43.4
315		49.4
400		50.1
500		51.6
600		52.5
800		45.2
1000		42.0
1250		55.0
1600		61.5
2000		61.4
2500		67.8
3150		67.8
4000	≥	68.2
5000	≥	68.5
AAD		-29.5

frequency range for rating in accordance with ISO 717-1

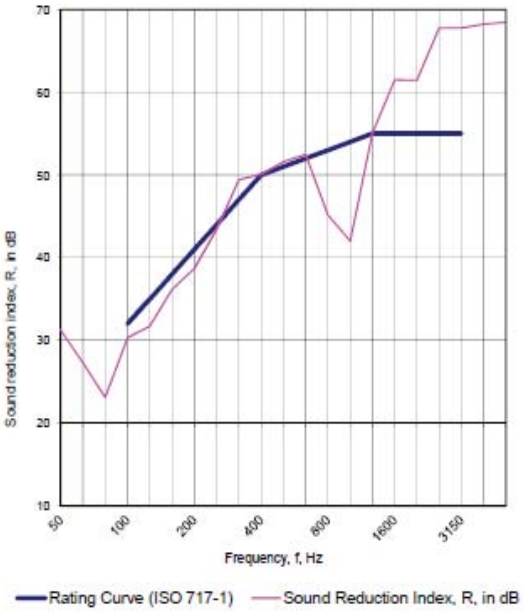

$D_{n,e,w}$ =	51 dB
$D_{n,e,w}$+C =	48 dB
$D_{n,e,w}$+C_{tr} =	44 dB

$C_{(50-3150)}$ =	-3	dB	$C_{tr\,(50-3150)}$ =	-11	dB
$C_{(50-5000)}$ =	-2	dB	$C_{tr\,(50-5000)}$ =	-11	dB
$C_{(100-5000)}$ =	-2	dB	$C_{tr\,(100-5000)}$ =	-7	dB

Martin Durham
Technical Officer

* indicates that the frequency is outside of our UKAS accreditation and is for information only

The legal validity of this report can only be claimed on presentation of the complete report

Report for: FSi Limited
Report Ref: Chilt/Z: 12009/01/C/Rev1/AR3

Page 11 of 12

Astroflame Fireseals Ltd
Unit 8, The I O Centre
Stephenson Road
Segensworth, Fareham
Hampshire, PO15 5RU

Tel: +44 (0) 1329 844500
Fax: +44 (0) 1329 844600
Email: sales@astroflame.com
Website: www.astroflame.com

TECHNICAL DATA SHEET

ASTROFLAME

PS COATING®

ETA 14-0097

CE-1121-CPR-JA5025

Unique identification code of product-type: AFPSC

BMTRADA

Laboratory measurement to BS EN ISO 10140-2 - Airborne Sound Insulation of Building Elements

Test Specimen Name: Astro PS Coating
Client: Astroflame Fireseals Limited
Test Specimen Installed By: BM TRADA
Area of Specimen (S): 1.00
Temperature in Test Rooms: 19.2 °C
Static Pressure: 10006.1 Pa
Humidity in Test Rooms: 44.0 %
Test Specimen Description: 500mm x 2000mm aperture filled with 2 layers of stone wool with PS Coating Barrier See Appendix 3 for specimen details.

Ref. No.: MTL/Z12009/01/C/Rev1/AR3/P005
Date of Test: 04/04/2012

Source Room Volume: 82.00 m^3
Receive Room Volume: 70.00 m^3

f, Hz	R, dB
50*	21.3
63*	17.3
80*	13.1
100	20.3
125	21.7
160	26.2
200	28.7
250	33.4
315	39.4
400	40.1
500	41.6
600	42.5
800	35.2
1000	32.0
1250	45.0
1600	51.5
2000	51.4
2500	54.8
3150	57.8
4000	≥ 58.2
5000	≥ 58.5
AAD	-29.5

Frequency range for rating in accordance with ISO 717-1

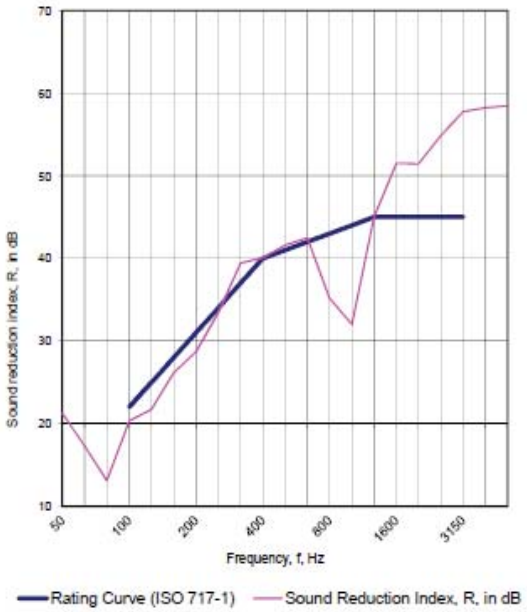

R_w =	41 dB
R_w+C =	38 dB
R_w+C_{tr} =	34 dB

$C_{(50-3150)}$ =	-3	dB	$C_{tr\,(50-3150)}$ =	-11	dB
$C_{(50-5000)}$ =	-2	dB	$C_{tr\,(50-5000)}$ =	-11	dB
$C_{(100-5000)}$ =	-2	dB	$C_{tr\,(100-5000)}$ =	-7	dB

Martin Durham
Technical Officer

* indicates that the frequency is outside of our UKAS accreditation and is for information only

The legal validity of this report can only be claimed on presentation of the complete report

Report for: FSi Limited
Report Ref: Chilt/Z12009/01/C/Rev1/AR3

Page 9 of 12

TECHNICAL DATA SHEET

ASTROFLAME

PS COATING®

ETA 14-0097

CE-1121-CPR-JA5025

Unique identification code of product-type: AFPSC

PRODUCTION BUILD OF ASTRO PS COATING
Fire Resistance EI 60
Acoustic Isolation Dne,w 51dB - Rw 41dB

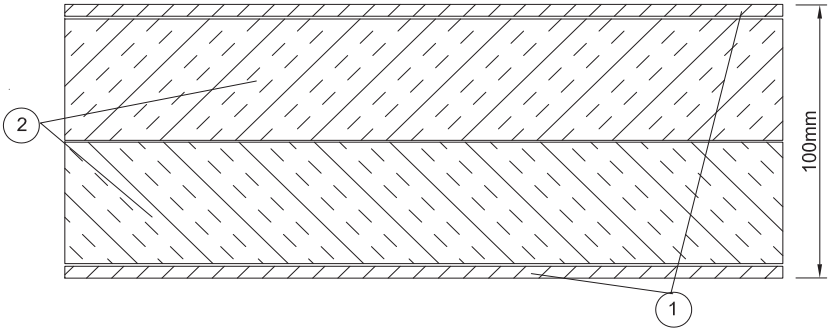

1 - ASTRO PS COATING 1mm WTF (0.7mm DFT)
2 - STONE WOOL BATT - 140kg DENSITY STONE WOOL COATED OUTER FACES

ASTROFLAME MANUFACTURERS OF PASSIVE FIRE STOP PRODUCTS	FILE NAME: DET 41-0045 DATE: 20/05/14	Astroflame (Fireseals) Limited Intumescent House Unit 8 The IO Centre Stephenson Road Segensworth Fareham, PO15 5RU	ASTROFLAME has provided this specification on the basis of data, information & site conditions given to ASTROFLAME by the client, the respective ASTROFLAME product information & the existing level of technical knowledge. This specification relates to the expected performance of the proposed detail, were it to be subjected to the standardised test against which the judgement was made. The accuracy of this specification can only be guaranteed provided: 1. Only original ASTROFLAME products as defined within this specification are used 2. These specific products are used & installed only by a competant, experienced installer & by strictly obeying the conditions & calculations mentioned in this specification, as well as all relevent technical instructions, operating manuals, setting manuals, installation manuals & all other ASTROFLAME data sheets. 3. The proposed performance, listed prerequisities & criteria conform with actual existing site conditions & have been checked & agreed by the installer & client.

TECHNICAL DATA SHEET

ASTROFLAME
PS COATING®

ETA 14-0097
CE-1121-CPR-JA5025

Unique identification code of product-type: AFPSC

Technical specification document
Chilt/P12083/tec2/AR3

Performance testing to the principles of BS EN 1026: 2000 Windows and doors - Air permeability - Test method. Was conducted on your panel on 11 September 2012. The technical specification is detailed below. The specimen was delivered to BM TRADA's laboratory on 10 September 2012.

Description of construction

The specimen was identified as Astroflame PS Coating Barrier (50mm). The overall panel dimensions were 600mm wide x 1200mm high x 50mm deep and mounted within a softwood subframe for installation into the test rig.

Panel

	Material/type	Dimensions (mm)	Density (kg/m³)
Panel	Astroflame PS Coating Barrier coated both faces	50 thick	140kg*
Coating	Astroflame PS Coating	1 thick (wet thickness)	-

Astroflame Fireseals Ltd
Unit 8, The I O Centre
Stephenson Road
Segensworth, Fareham
Hampshire, PO15 5RU

Tel: +44 (0) 1329 844500
Fax: +44 (0) 1329 844600
Email: sales@astroflame.com
Website: www.astroflame.com

TECHNICAL DATA SHEET

ASTROFLAME
PS COATING®

ETA 14-0097
CE-1121-CPR-JA5025

Unique identification code of product-type: AFPSC

BMTRADA

Results of Test: Chilt/P12083/02/AR3

Astroflame Fireseals Ltd
Unit 8, The I O Centre
Stephenson Road
Segensworth, Fareham
Hampshire, PO15 5RU

This document confirms that performance testing was conducted on 11 September 2012. Testing was conducted the principles of the following standard:-

- BS EN 1026: 2000 Windows and doors - Air permeability - Test method.

The following results were achieved

Product tested			PS Coating Barrier (50mm)	
	Results under positive chamber pressure		Results under negative chamber pressure	
Pressure (Pa)	Leakage (m^3/h)	Leakage ($m^3/m^2/h$)	Leakage (m^3/h)	Leakage ($m^3/m^2/h$)
50	0.6	0.8	1.1	1.5
100	1.0	1.4	1.3	1.8
150	2.8	3.9	1.5	2.1
200	3.8	5.3	1.9	2.6
250	4.5	6.3	2.0	2.8
300	5.0	6.9	2.4	3.3
450	5.1	7.1	1.9	2.6
600	6.7	9.3	2.2	3.1

The results relate only to the specimen tested, as detailed in the technical specification Chilt/P12083/tec2/AR3

Paul Andrews – Head of Section

Vincent Kerrigan - Technical Manager
Date: 22 January 2014

BM TRADA

Chiltern House, Stocking Lane, Hughenden Valley, High Wycombe, HP14 4ND, United Kingdom

Tel: 01494 569800 Fax: 01494 564895

Web: www.bmtradagroup.com
Email: testing@bmtrada.com

TECHNICAL DATA SHEET

ASTROFLAME

PS COATING®

ETA 14-0097

CE-1121-CPR-JA5025

Unique identification code of product-type: AFPSC

PRODUCTION BUILD OF ASTRO PS COATING
Fire Resistance 60 EI
Air Permeability tested pressure 600Pa

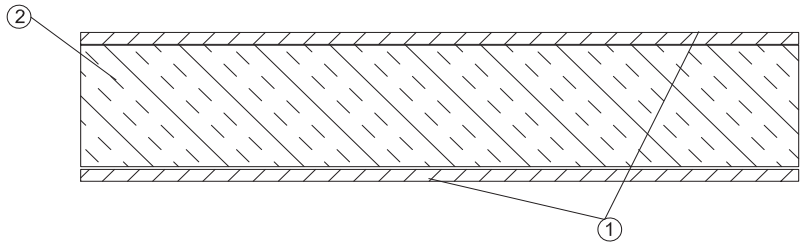

NOTES:
1 - ASTRO PS COATING 1mm WTF (0.7mm DFT)
2 - STONE WOOL140kg DENSITY COATED TWO FACES

ASTROFLAME MANUFACTURERS OF PASSIVE FIRE STOP PRODUCTS	FILE NAME: DET 41-0006 DATE: 20/05/14	Astroflame (Fireseals) Limited Intumescent House Unit 8 The IO Centre Stephenson Road Segensworth Fareham, PO15 5RU	ASTROFLAME has provided this specification on the basis of data, information & site conditions given to ASTROFLAME by the client, the respective ASTROFLAME product information & the existing level of technical knowledge. This specification relates to the expected performance of the proposed detail, were it to be subjected to the standardised test against which the judgement was made. The accuracy of this specification can only be guaranteed provided: 1. Only original ASTROFLAME products as defined within this specification are used 2. These specific products are used & installed only by a competant, experienced installer & by strictly obeying the conditions & calculations mentioned in this specification, as well as all relevent technical instructions, operating manuals, setting manuals, installation manuals & all other ASTROFLAME data sheets. 3. The proposed performance, listed prerequisities & criteria conform with actual existing site conditions & have been checked & agreed by the installer & client.